A distributed system for robotic multi-sensor integration

A.T. de Almeida, U.C. Nunes, J.M. Dias, H.J. Araújo and J. Batista
Electrical Engineering Department, University of Coimbra 3000 Coimbra, Portugal

Abstract. The development of multi-sensor based flexible assembly cells will increase substantially the scope of applications of manipulators in industry. This paper is concerned with the development of a multi-sensor assembly cell which can be used to evaluate the feasibility of automatic assembly of different products. The cell is built around a manipulator with six degrees of freedom, a conveyor belt and an assembly table. The sensorial system of the cell comprises a real-time vision system, gripper force, ultrasonic sensing and various detectors on the conveyor belt and assembly table. A simple and high-performance distributed control structure enables the exchange and integration of sensorial information as well as real-time path control.

Keywords. Distributed multi-sensors, flexible assembly cells, vision systems, parallel processing, ultrasonic sensing.

1. Introduction

The use of multi-sensor robots allows the execution of automatic assembly tasks with a certain degree of complexity. However, the increased flexibility achieved with multi-sensing requires the processing and the integration of substantial amounts of sensorial data which must be performed in real-time. These systems will have to be endowed at high-level with powerful algorithms, performing automatic planning of actions, and at low-level with run-time capabilities to monitor the course of those actions executed under sensor feedback. Sensory information collected and processed by different levels of control as well as sensory planning strategies will be necessary to synthesize and execute reliable motions. Sensory data should be gathered through a variety of sensing devices, analyzed and

Elsevier
Industrial Metrology 1 (1990) 217–229

Anibal T. de Almeida was born in Portugal on November 19, 1950. He graduated in Electrical Engineering, with first class of honours, from the University of Porto, 1972. He took his PhD at the University of London, 1977. He is currently Professor of Electrical Engineering and his research interests include industrial automation and robotics.

Urbano J. C. Nunes was born in Leiria, Portugal, on October 21, 1959. He received the BSc degree in Electrical Engineering from the University of Coimbra, on November 1983. He was an assistant at the Electrical Engineering Department of the University of Coimbra from November 1983 to November 1987. In November 1987 he became a research assistant by submitting a research work, equivalent to a MSc thesis. Currently he is working towards a PhD degree. His main research interests are sensor integration and sensor-based robot control.

Jorge M. M. Dias was born in Coimbra, Portugal, on March 7, 1960. He received the BSc degree in Electrical Engineering from the University of Coimbra, in July 1983. He was an assistant at the Electrical Engineering Department of the University of Coimbra. In February 1988 he presented a research work to obtain a degree equivalent to MSc. Currently he is working in computer vision to obtain a PhD degree. His main research interests are stereo vision, motion and depth perception using exploratory vision.

Helder J. Araújo was born in Mozambique, on October 12, 1958. He received his BSc and PhD degrees in Electrical Enginering from the University of Coimbra, in July 1981 and June 1989, respectively. He was a teaching assistant from November 1981 to November 1985, and a research assistant from November 1985 to July 1989, at the Electrical Engineering Department of the University of Coimbra. Currently he is an Assistant Professor at the same Department. His main research interests are stereo vision, motion and texture analysis.

Jorge M. P. Batista was born in Mozambique, on June 6, 1963. He received the BSc degree in Electrical Engineering from the University of Coimbra, in July 1986. He is a teaching assistant at the Electrical Engineering Department of the University of Coimbra. Currently he is working on camera calibration to obtain a degree equivalent to MSc. His main research interests are on camera calibration, stereo vision and depth perception.

transformed to build, or complement, the world model of the environment. For instance visual information might be required to allow reasoning about the geometric properties and spatial location and orientation of the object to be manipulated. Based on the on-line sensory information and on a pre-built model of the environment, planning operations, such as gross motion planning and the selection of feasible and suitable grasp configurations, can be undertaken. At the low-level the inclusion of sensory data is crucial since motions might be completely data-driven. At this level the speficication of sensor-based control strategies is a key point. The sensorial contribution described until now suffices for the specification and execution of isolated pieces of specialized motions. An autonomous system should have the power to select automatically the suitable specialized motion, adapted to the state of the task under execution, at each moment. Thus for a system to have the ability to synthesize and execute reliable motions it should also have the capability of planning sensory strategies. As an example, sensory planning should provide solutions for the following situations: When should a vision system be used to cope with an uncertain object position? How to process sensory data to extract outstanding information? What sensors to use to decide for the end of an action? What sensors to test to decide for the success/failure of an action? What sensors to scan continuously in order to minimize, or prevent, secondary effects due to an error or a failure?

The aim of the work described in this paper is to develop a robotic system able to support and to facilitate the evaluation of sensorial integration techniques and to allow the exploitation of real-time path control strategies. Most commercial robots, as in the case of the six-axis manipulator (Puma), do not have enough flexibility to allow an efficient use of sensory information. For that purpose, an approach can be to use an external computational system, to gather and to integrate the sensor information, actuating as the supervisory system. Several configurations to connect an external computational system to a Puma controller are possible [1]. One possible configuration is to use the facilities provided by the manipulator controller for real-time path control (Alter) and for communications to an external supervisory system. Nevertheless the limitations of such a configuration, it provides enough power and flexibility to many applications. Our robotic system approach, structured as shown in Fig. 1, uses a simple and high-performance distributed system for sensor data acquisition and actuation. It uses an hierarchical architecture (Multi-BitBus [2]) with the Local Supervisor, as a low-level master, connected to the manipulator controller through the real-time path control port (Alter). This level was included to support real-time path control based on sensory data. For all the system the raw data provided by the sensors is preprocessed by local control units which transmit to the Supervisor high-level information through the high-speed serial network (BitBus). Presently the main devices of the assembly cell are:

- A six axis manipulator (Puma 560);
- A two finger gripper equipped with sensors;
- A conveyor belt equipped with a set of functions;
- A rotary table with pneumatic indexing

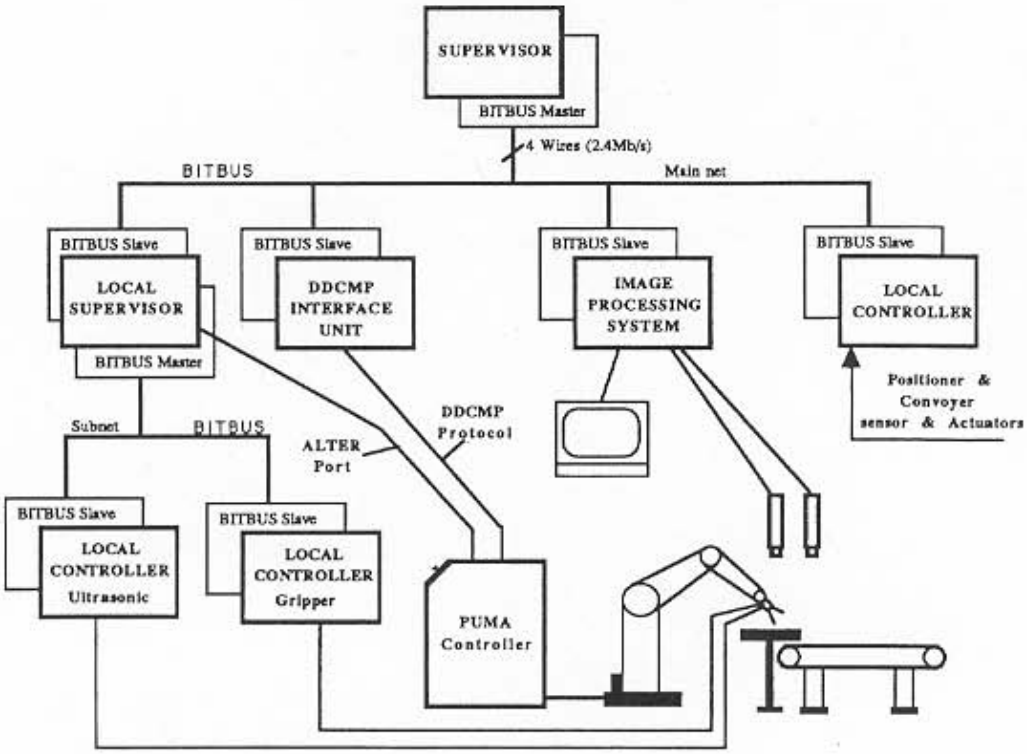

Fig. 1. Schematic of sensor-based robotic assembly cell.

There are several sensors and actuators associated with these devices which in the case of the conveyor belt are the brake and the motor speed control, sensors to monitor the motor speed and miniature optical devices to detect objects on the conveyor. A table with pneumatic indexing is used for the assembly of components. The gripper is pneumatically controlled by using a pneumatic proportional valve which allows continuous variation of the force applied to the handling objects. It is equipped with an optical sensor, to detect the presence of objects between the fingers, and ultrasonic ranging sensors.

The actuators and sensing units of the conveyor, indexing table and gripper (see Fig. 1) are connected to the high-speed serial network (BitBus) through a microcontroller-based modular system [3, 4]. A set of boards corresponding to a variety of functions has been implemented around the modular system parallel-bus with which is possible to accomplish diverse control and monitoring applications. Boards have been developed for: analog acquisition and actuation; motor control (DC, DC brushless and step motors), power interfaces; PWM actuators; conditioning signal, etc.

The vision system is based on a host computer, a frame grabber and several image processing units. The frame grabber can receive images from up to four cameras with a resolution of 512×512 pixels and has a programmable pseudo-colour output. The image processing units, based on a very fast digital signal

processor, carry out the feature extraction operations on the images obtained by the frame grabber. Several image processing units can be connected in a parallel-processor architecture if the time requirements dictate such a need.

2. Distributed system architecture

The control system in use exhibits an hierarchical structure of the form illustrated in Fig. 1. It is expected that this computational structure can be useful for the following tasks:

- To support simple automatic assembly applications in real-time. The computational structure should be powerful enough to allow the study of assembly applications with substantial sensory requirements. It should also be flexible enough in order to cope with the study and the development of different assembly subtasks.
- To allow the access to the cell resources from other computational systems working at a higher level. At this level, rather more complex problems (3-D vision integration; path planning; fine-motion studies; grasp planning; domain modelling, etc) are expected to be investigated.

In order to achieve the first purpose, the control system was implemented following a distribution model based on a high-speed short-message channel and using slaves with a high processing capacity. For the second purpose work is under way to connect the supervisor to a higher level network on which we have workstations.

To establish a communications between the supervisor workstation and the distributed slave systems a serial network in a bus tropology (the BitBus) is used. This network has enough attributes which lead to attractive solutions for a wide spectrum of local control applications, particularly at the sensor and actuator level. It exhibits a good performance in handling short messages namely allowing high order rates of information transmission (up to 2.4 Mb/s in half-duplex, synchronous mode). Besides, a modified version based on the BitBus is being specified with potential to be adopted as the basis of the Fieldbus[1] standard [5].

3. Vision system

A vision system was developed for image processing in the fields of robotics and products inspection [6]. Taking advantage of the flexibility of a programmable Digital Signal Processor (DSP) and being built around an industrial standard bus, the system can be configured in a number of ways allowing a wide spectrum of applications (Fig. 2) Working under the control of a host computer, the vision system, in its minimum configuration, is composed of two boards which are capable

[1]The Fieldbus standard is intended to define a serial communications network for interfacing low-level devices in factories such as sensors and actuators. Although the Fieldbus is still at the specification stage, it is clear that any of the existent industrial buses will fit the incoming standard.

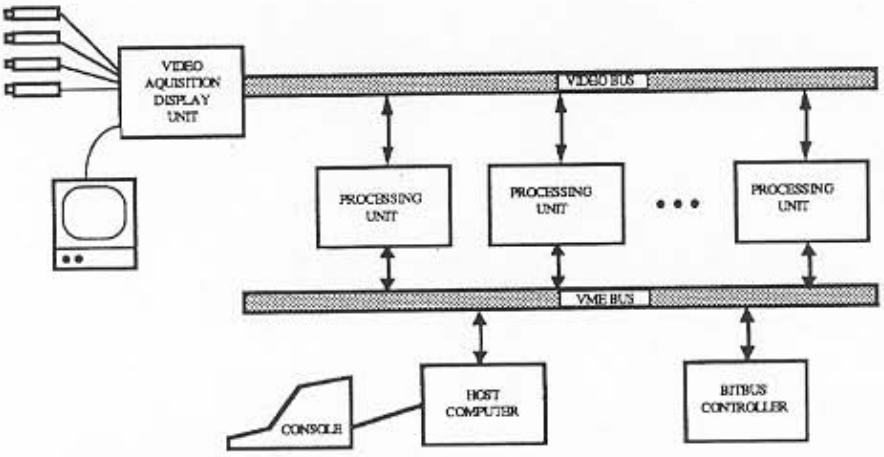

Fig. 2. Block diagram of the VMEbus-based vision system. The video signal from one of the four cameras is converted into digital form by an acquisition board and is made available, through a video bus, to several processing boards. A host computer controls the operation of the whole system.

of handling images of 512×512 pixels with 256 grey levels per pixel: a video acquisition display and transmission unit and an intelligent image processing unit.

The vision system, including a general-purpose digital signal processor in the image processing units, allows the contruction of a Single-Instruction-Multiple-Data (SIMD) structure suitable for vision processing without compromising flexibility. On the other hand, the modular approach taken in the design of the system permits its adaptation to particular applications.

3.1. Acquisition, display and transmission board

The video-acquisition display and transmission board [7] is a self-contained unit interfacing this system to standard black-and-white TV cameras using the CCIR (Comité Consultative International des Radio-communications) norm and to conventional black-and-white monitors (see Fig. 3). Up to four video inputs can

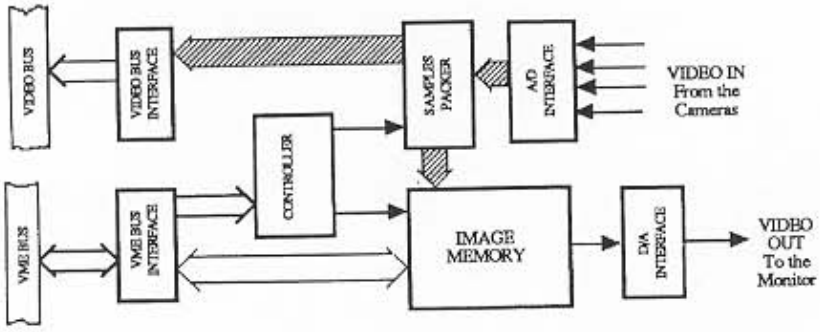

Fig. 3. Schematic of the acquisition, display and transmission boards.

be connected to the acquisition board which uses an 8-bit analog-to-digital flash converter to digitize the selected channel. This provides information associated with multiple views of the working cell. Before being stored in the memory, the digitized sample passes through a look-up table of 256 entries allowing simple processing, such as binarization of an image, in real time. The display section of the board uses a conventional cathode-ray tube (CRT) controller and a colour look-up table which incorporates three 8-bit digital-to-analog converters to generate an RGB video signal with 256 colours from a palette of 256K possibilities.

The acquisition board has the capacity for the complete images of 512 × 512 pixels on its internal 512K bytes of RAM memory, organized as two 256K bytes frame buffers—a useful facility during developing and testing stages to compare raw and processed images. Although the video memory is accessible by the host on a pixel basis, allowing image processing, this is not the normal working situation. In fact, a major feature of the board is the capability of transmitting, through a secondary bus, the digitized video which becomes available to the intelligent image processing boards whih are connected to the system. When activated by the host, the transmitting section of the board sends two samples of video data and their corresponding addresses every 125 ns. The vision system features a fast video bus with a simple unidirectional structure allowing the transfer of incoming camera picture to the processing units.

3.2. Intelligent image processing boards

Each of the intelligent image processing boards [8] used in the vision system consists of four parts: a video input module, digital signal processor (DSP), a local memory and the interface to the main bus (VMEbus), as shown schematically in Fig. 4.

The video input and the addresses appearing on the video bus to place an image, or part of it, in memory. Under the command of the host computer, the video input module may be configured to acquire images of different sizes (windows) and

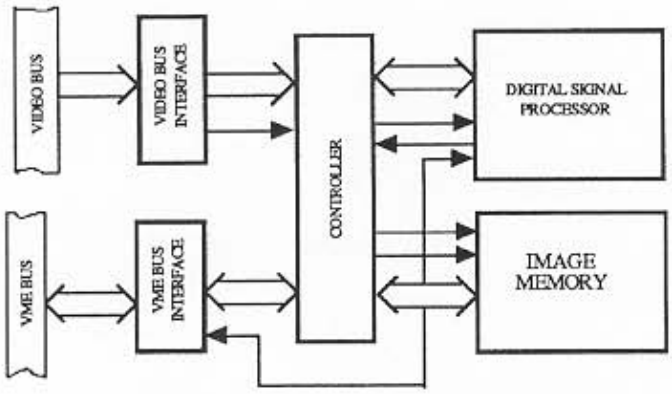

Fig. 4. Schematic of the intelligent image processing board.

different resolutions. In choosing a digital signal processor for this system, a special consideration was given to the capability of addressing a large range of external memory, as it is required in image processing. The intelligence of the board is only local and the DSP processor is totally controlled by the host computer. In fact, all the memory of the DSP processor, both program memory and data or video memory, is RAM and appears in the address map of the host which, for example, may halt the DSP processor, download a program or a command, activate the reception of a picture through the video bus and return control to the DSP processor for execution of the command.

This intelligent board can store and process a complete 8-bit 512 × 512 image, i.e. 256K pixels. This information is physically stored in static RAM memory which may be accessed by three elements: the video bus, the VME host and the digital signal processor. An important aspect of the video memory organization refers to the arbitration between the three sources of access. The video bus has the highest priority, having the whole memory available during the total transfer of an image. The host computer has the responsibility of halting the DSP processor before making accessing the video memory, avoiding in this way any conflicts in the access to the shared memory. The VME interface module of the processing board permits access to the video memory, access to the digital signal processor programme memory, control of the video interface module and control of a number of registers to operate the board.

3.3. Camera calibration

In order to build the world model it is important to compute the depth map of the environment. For that purpose two cameras are attached to the gripper's end-effector.

To compute depth we need to find out, with reasonable accuracy, the relative transformation between the 2-D image and the referential representing the tool. The solution of this problem is obtained by performing a calibration of the stereo pair of cameras. As a result of this process, we obtain two (3 × 4) matrices which express the above mentioned transformations. If the transformation between origins of the two cameras' referentials is known, then the coordionates of any point in the 3-D world can be calculated by using its projections on the left and right images.

The basic problem in camera calibration is to obtain the relationship between the three-dimensional world and the two-dimensional images captured by the cameras (Fig. 5). This relationship can be expressed by a linear equation:

$$\begin{bmatrix} sX \\ sY \\ s \end{bmatrix} = \mathbf{CAM} \begin{bmatrix} x \\ y \\ z \\ 1 \end{bmatrix} \tag{1}$$

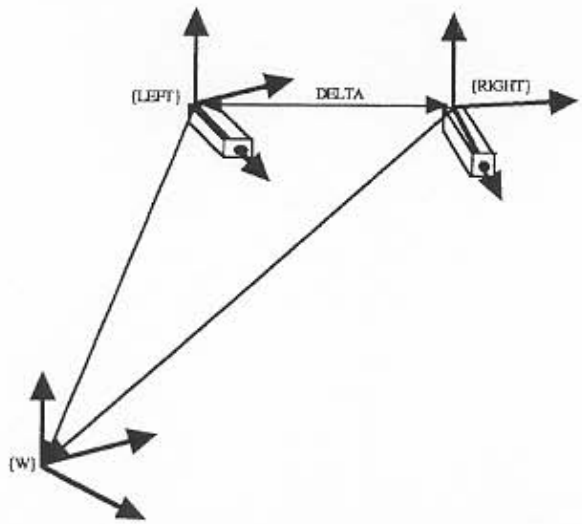

Fig. 5. Geometry of the stereo pair. The (LEFT) and (RIGHT) referentials are the three-dimensional referentials of the cameras. The relationship between the cameras' referentials and the world referential is known.

Here (X, Y) are the coordinates of the projections in the image of a point $p(x, y, z)$ in the 3-D world and s is a scale factor. By algebraic manipulation, (1) can be expressed in the equivalent form:

$$\begin{bmatrix} X \\ Y \end{bmatrix} = \boldsymbol{Ta}, \tag{2}$$

where $\boldsymbol{a}$ is a vector made up of the 11 unknowns of **CAM** in a vector form (element (3,4) is set to one—see [9,10] for details).

For evaluation of $\boldsymbol{T}$ we analyze an image of a grid of points, whose world coordinates are known. By using the correspondence between the points in the 3-D scene and the corresponding points in the 2-D image we can write a set of equations using relationship (2). This system can be solved using more points than those strictly necessary, by using extra measurements using to offset the noise effects or "filter" the data. For this purpose a solution for $\boldsymbol{T}$ can be obtained by a least-squares estimation. To obtain this solution all available points should be used in the computation of $\boldsymbol{T}$.

Another interesting solution can be obtained by the possibility of capturing several pictures in different positions in order to obtain an optimal estimation of $\boldsymbol{T}$ (and implicitly **CAM**). For that purpose we use a recursive form of the least-squares estimation [11].

4. Manipulator gripper and associated sensors

The gripper is pneumatically controlled using a pneumatic proportional valve which allows continuous variation of the force applied to the handling objects.

For that purpose, it has a force sensor which uses a thin-film strain gauge bridge deposited in vacuum over the element to be deformed. The contact forces are sensed and based on the difference between the desired force and the sensed force, a PWM (pulse-width-modulated) signal is generated to control the proportional valve pressure. It should be noted that this force feedback control can only be applied when the fingers are in contact. In a non-contact situation the opening/closing movements of the fingers are executed under open loop control. In fact, the aim of this force sensor arrangement is to allow the use of the pneumatic gripper with a continuous force capability. For continuous positioning either analogue inductive or infrared proximity sensors within the fingers can be used.

The strain gauge signal conditioner comprises an instrumentation amplifier and a 3-pole Bessel low-pass filter. The analog to digital conversion is accomplished by a 12-bit ADC converter with serial output. The next stage of the signal processing is performed in a physically separated "intelligent" system (see Fig. 6) which has interface registers and the PWM circuit, and a microcontroller board with the high-speed serial interface (BitBus). The pair of infrared LED and photodiode

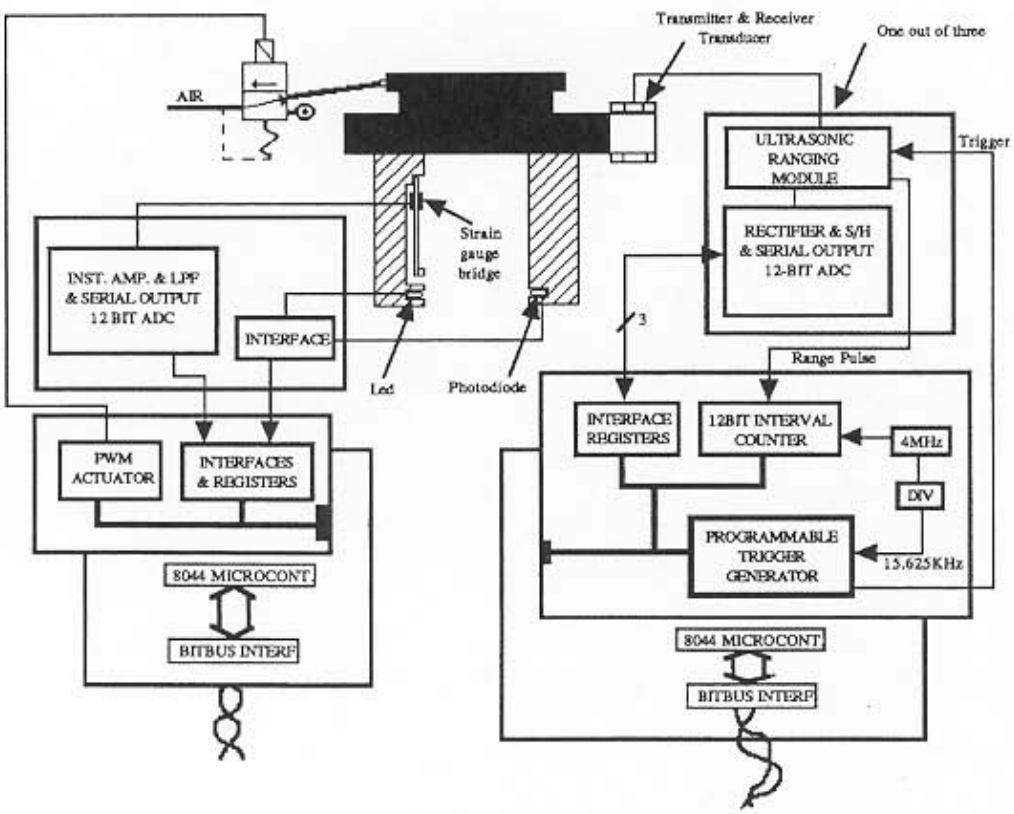

Fig. 6. Manipulator gripper and associated sensors System set-up and information flow.

installed near the bottom of the fingers is used to detect the presence of objects within the fingers.

4.1. Ultrasonic system

Non-contact sensing is important to many robotic applications. Seam tracking for arc welding [12,13], path control [14], grasping [15], surface following and guarded motions [16] are examples of applications which require non-contact sensing feedback. Application of ultrasonic sensors in robotics has been considerable since they are inexpensive, they give range information and also give some insight on surface orientation. In our application, the goal is to obtain 3-D surface information and to achieve three-dimensional path control using three ultrasonic sensors. Each sensor has an ultrasonic ranging module with a single transmitter and receiver transducer. The transducers have a resonant frequency of about 215 kHz and the ranging modules output two principal signals: a digital signal whose pulse width is directly proportional to the distance and an amplifier analog acoustic signal with all echoes reflected. The pulse width is measured with 12-bit resolution by an interval counter. The repetition rate of the trigger pulse applied to the ultrasonic module, which controls the acoustic emissions, is programmable and can assume discrete values between 61 Hz and 400 Hz. This capability allows for variable triggering as a function of the distance to be measured. This is of great importance when real-time performance is required. The analog signal is rectified and converted to a digital value using a 12-bit ADC with serial output.

By analyzing the reflected echoes it is possible to derive information regarding the surface orientation. The intensity of the echoes decreases as the orientation angle (angle between the transducer's line of sight and the normal to the surface) increases. In the same way the reflected intensity echoes also decreases as the distance to the object surface increases. This decrease which mainly follows an inverse square law, is also due to the absorption of the sound energy by air and by the reflecting surface. However, considering an homogeneous environment and considering constant the frequency of the acoustic wave, it is possible to determine approximated equations relating the orientation angle with measured values of the echoes waveforms and distance. For this purpose statistical analysis has been followed to account for the noise and other spurious effects.

5. Software considerations

The support software of the overall distributed system is described by the diagram of Fig. 7. In a simplified way the following functional layers can be outlined:

- A Data link which implements a subset of the synchronous data link control protocol (SLDC);
- A Transaction layer which defines a message format that assures the transparency in the exchange of information between the master and slave tasks;
- A Cell application support layer which implements several procedures to

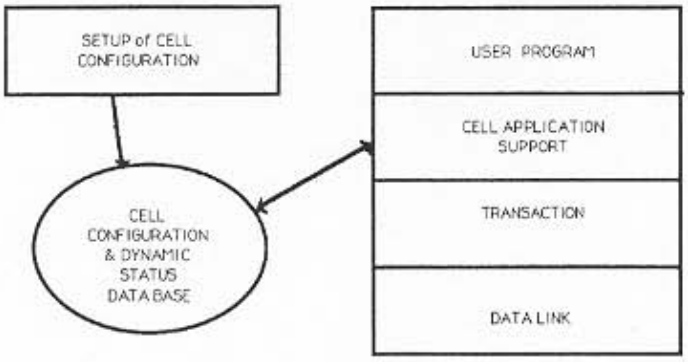

Fig. 7. Software structure diagram.

allow the interaction of the cell actions distributed throughout the cell subsystems;

- An Application layer which corresponds to the user applications.

The first two layers follow the high-speed serial (BitBus) specifications. The cell application support layer aims at performing the interface between the user programmes and the distributed cell resources. From the user point of view this layer appears as a set of procedures which allow him to know the state of the cell and to initiate remote cell actions transparently (without knowledge of the physical configuration of the cell). For that purpose, the procedures use a data base with information about either the physical configuration of the cell or the dynamic cell status information. The set of available commands assume diverse levels of complexity such as: a simple examination of the state of an ON/OFF sensor, a command to trigger a MOVE operation by the Puma robot, but executed under sensorial feedback. The information to be supplied by the user is of the following type:

- Name (Name of the sensor or actuator);
- Type (sensor or actutor);
- Node address (Physical address of the processing slave station);
- Is an extension (yes/no)?;
- Number of the task;
- Type of the frame reference (Dynamic or static);
- Frame relating to (Name);
- Numerical components of the frame.

The connections to the manipulator controller are assured by two software modules which reside in different slave units, as shown in Fig. 1. The supervisory communications which use the digital data communications message protocol (DDCMP) are assured by the DDCMP Interface Unit [17] while the real-time path control communications are controlled by the Local Supervisor [18] (see Fig. 1). Both of the software modules which implement these communications protocols belong to the Cell Application Support Layer of the hierarchical model of the robotic system.

6. Conclusions

A distributed system has been described which aims to support the sensorial integration in a robotic environment. A high-speed serial network architecture was chosen exploiting its features of low cost, easy implementation and good performance on short message transfers. The integration of several types of sensors around the manipulator allows the estimation of a multi-level world model and thus enables the implementation of sophisticated assembly tasks. Work is under way on the use of ultrasonic sensors in path control, with the use of a wrist sensor to investigate motion on contact and with the use of optical proximity sensors on the gripper to act in grasping operations.

References

[1] A. Goldenberg and L. Chan, An approach to real-time control of robots in task space. Application to control of PUMA 560 without VAL-II, *IEEE Trans. Ind. Electron.* **35**, (2) (May 1988) 231–238.

[2] The BitBus interconnect serial control bus specification, in: *Distributed Control Modules Databook*, Intel Corporation, 1984, pp. 100–147.

[3] U.C. Nunes, Contribuições no Desenvolvimento de um Sistema Modular, Internal Technical Report, DEE University of Coimbra, November 1987 (in Portuguese).

[4] J.M. Dias, A.G. Martins and U.C. Nunes, A modular approach to distributed control implementation, *IFAC Low Cost Automation*, Spain, 1986, pp. 459–463.

[5] B. Armitage, G. Dunlop, D. Hutchison and S. Yu, Fieldbus: An emerging communications standard, *Microprocess., Microsyst.* **12** (10) (December 1988) 555–562.

[6] L. Sá, J.M. Dias and V. Silva, A modular approach to image processing through the VMEbus, *I VMEbus Research Conference*, Zurich, 1988.

[7] V. Silva and L. Sá, ACTIVE—Sistema para aquisição em computador e transmissão de imagens vídeo, 30. *Simpósio de Electrónica das Telecomunicações*, Porto, 4–6 May 1988 (in Portuguese).

[8] J.M. Dias and L. Sá. Módulo de processamento digital de imagem com microprocessador de sinal, 30. *Simpósio de Electrónica das Telecomunicações*, Porto, 4–6 May 1988 (in Portuguese).

[9] G. Toscani, Systéme de calibration optique et perception du mouvement en vision artificielle, PhD thesis, Paris-Orsay, 1987.

[10] O.D. Faugeras and G. Toscani, The calibration problem for stereo, *IEEE Proc. CVPR' 86*, Miami Beach, FL, 1986, pp. 15–20.

[11] J.M. Mendel, *Lessons in Digital Estimation Theory*, Prentice-Hall, Englewood Cliffs, New Jersey, 1987.

[12] E.L. Estochen, C.P. Neuman and F.B. Prinz, Application of acoustic sensors to robotic seam tracking, *IEEE Trans. Ind. Electron.* **IE-31**, (3) (August 1984) 219–224.

[13] B. Maqueira, C. Umeagukwu and J. Jarzynski, Application of ultrasonic sensors to robotic seam tracking, *IEEE Trans. Robot. Autom.* **5** (June 1989) 227–343.

[14] K. Furuta and M. Sampei, Path control of a three-dimensional linear motional mechanical system using laser, *IEEE Trans. Ind. Electron.*, **35** (1) (February 1988) 52–59.

[15] B. Espiau and J.Y. Catros, Use of optical reflectance in robotics applications, *IEEE Trans. Syst. Man Cybern.* **SMC-10** (12) (December 1980) 903–912.

[16] F. Thomas, Real-time processing of spatial proximity information to accomplish guarded motions., Application to control of PUMA 560, *IEEE Workshop SIFIR 89*, 1989, pp. 287–292.

[17] E. Capote, J. Machado, F. Bastos, J. Dias and U. Nunes, Utilização do DDCMP, Internal Technical Report, DEE-University of Coimbra, 1989 (in Portuguese).

[18] M. Crisóstomo, Some aspects of surface following with a PUMA 560 robot, Internal Technical Report, Manuf. & Eng. Systems Dept., Brunel University, 1989.